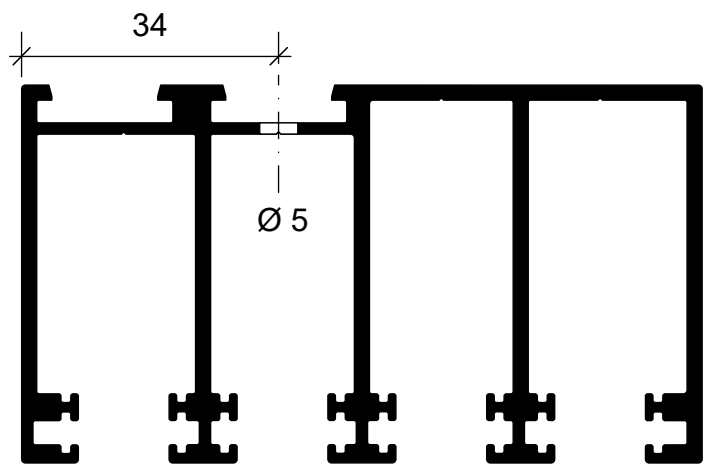

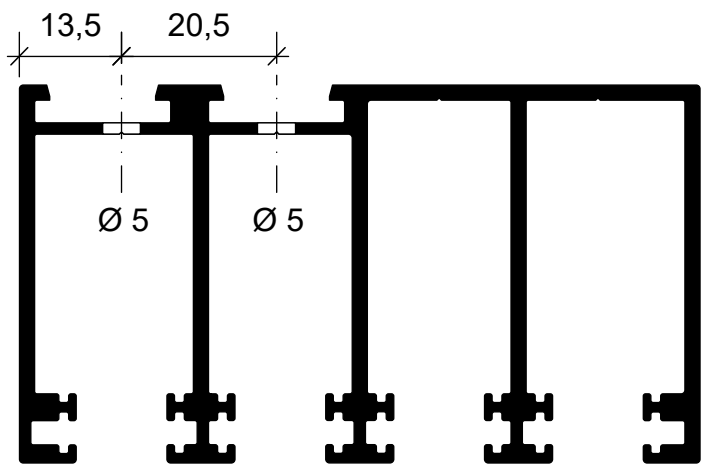

Detail A

Detail B

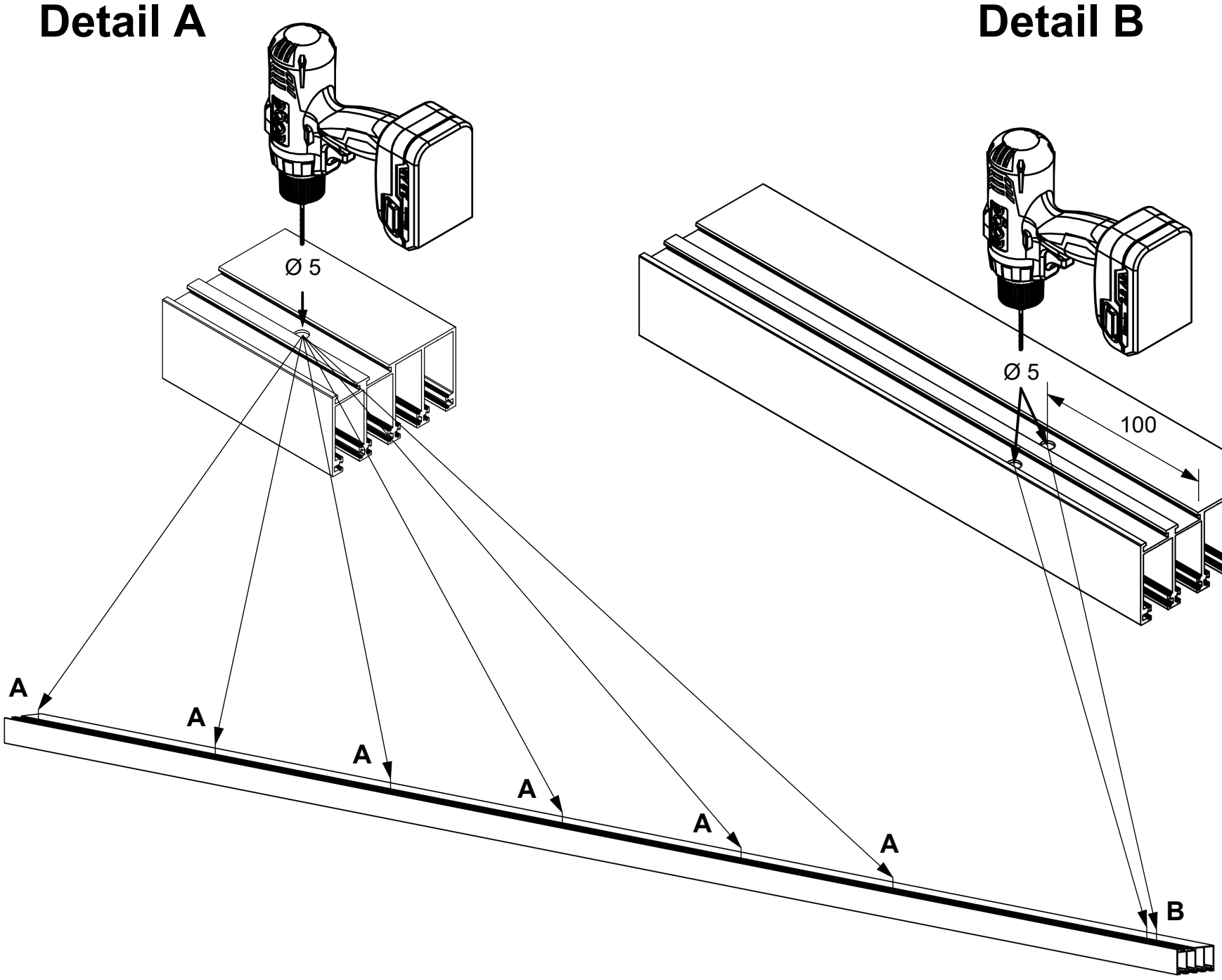

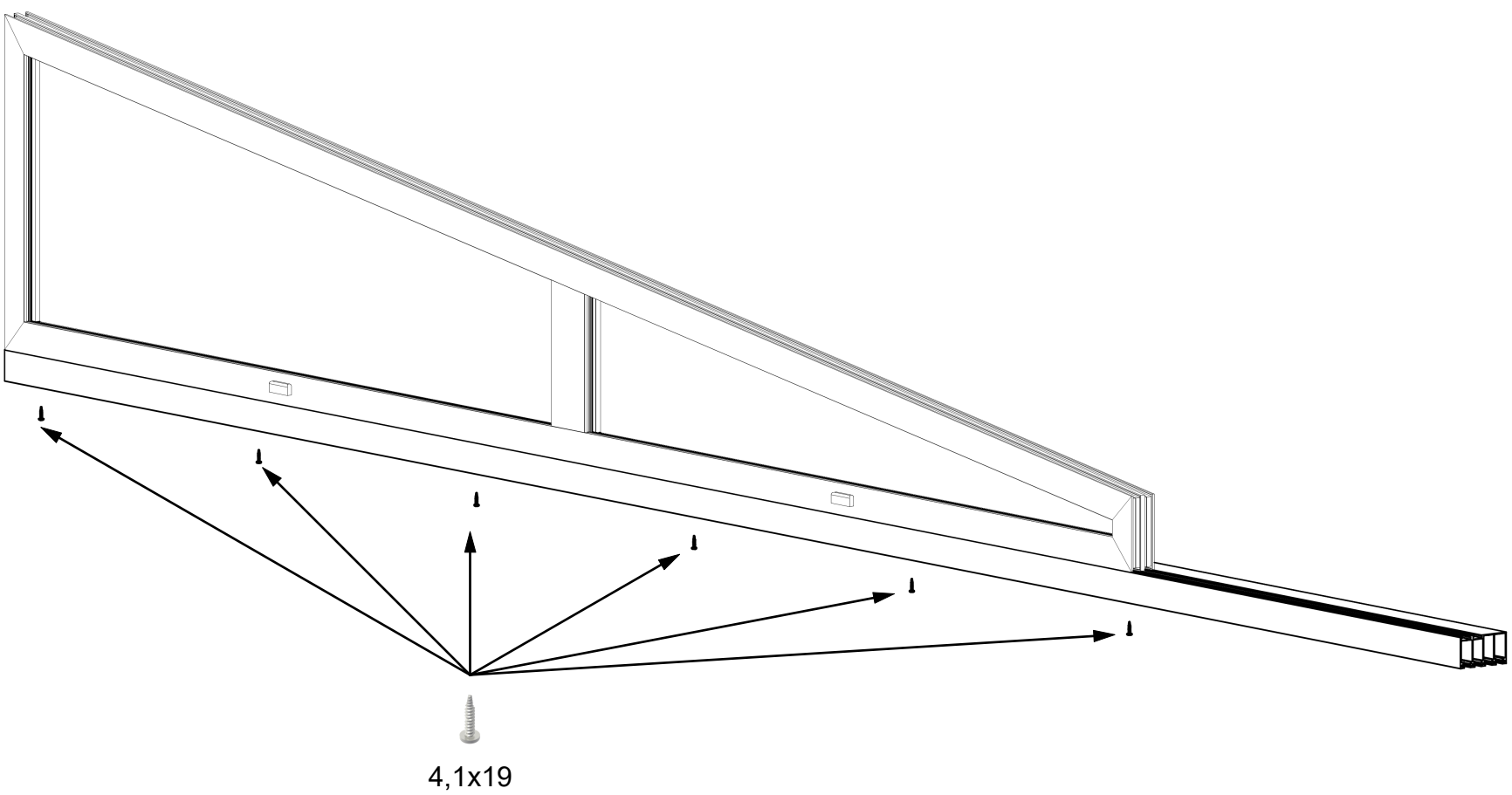

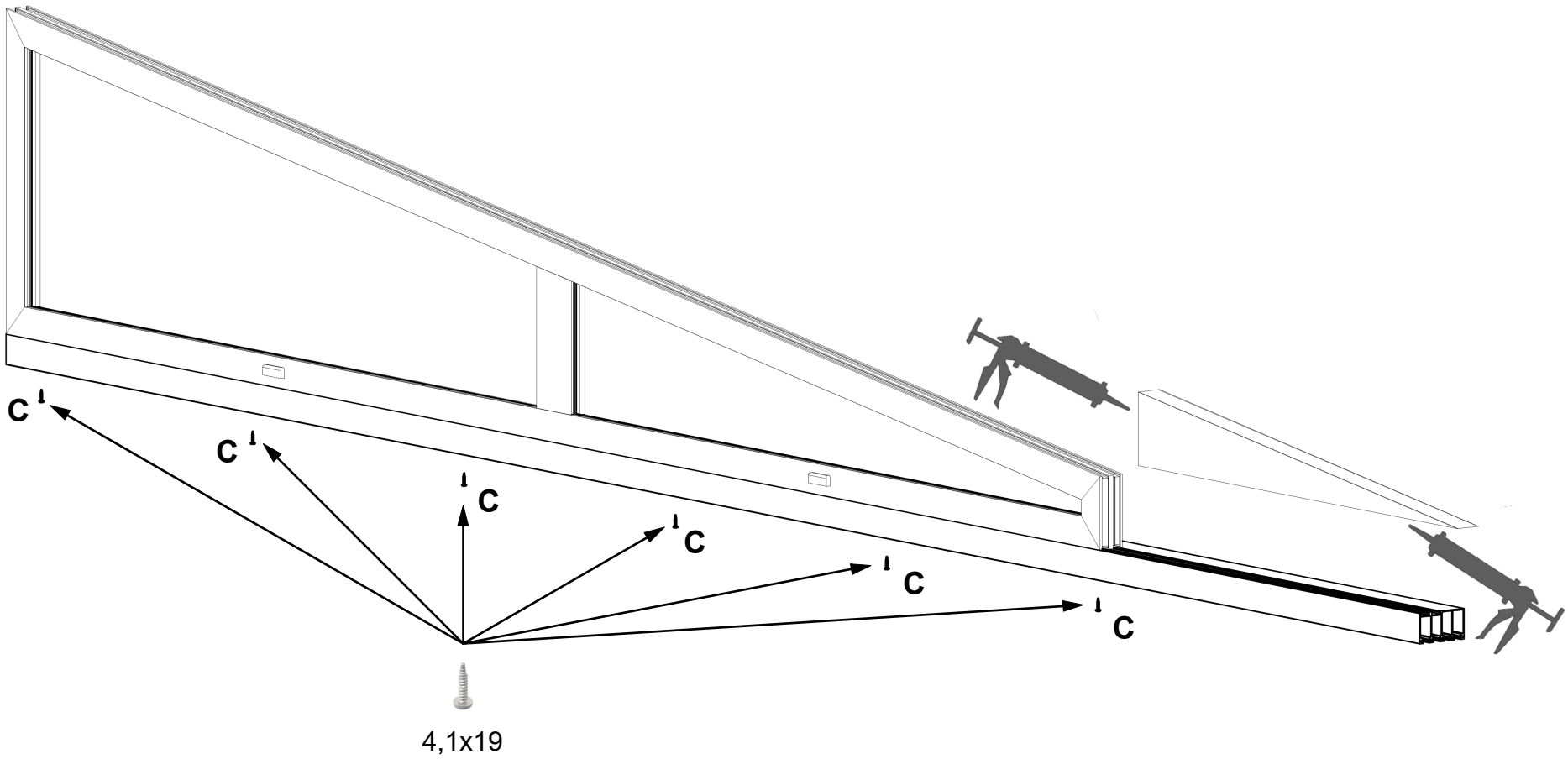
C
C
C
C
C
C
4,1x19

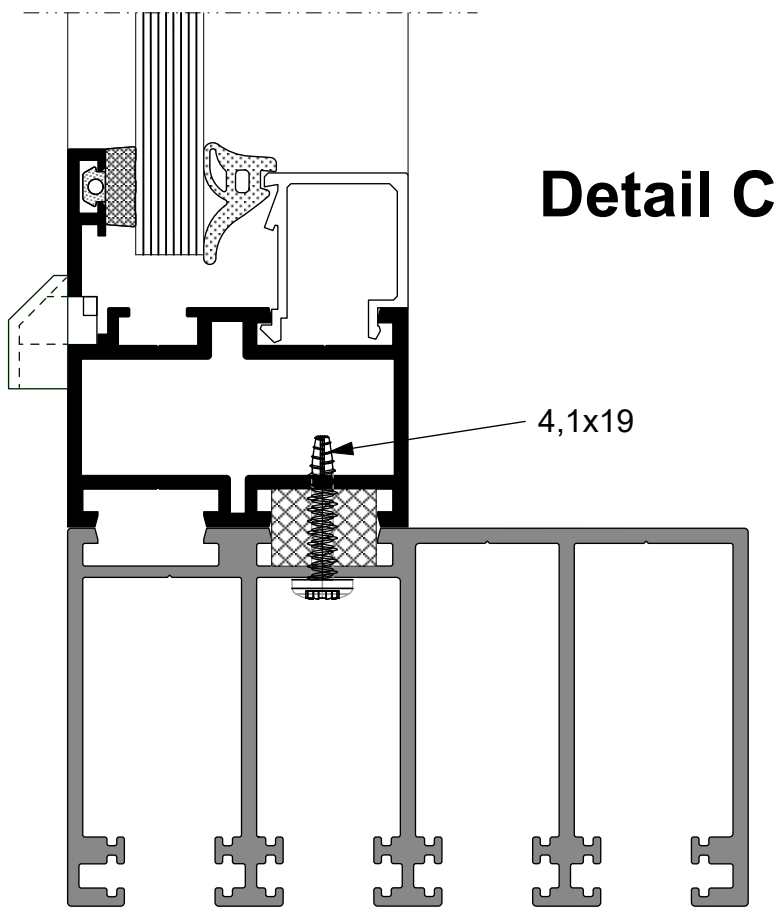
Detail C
4,1x19

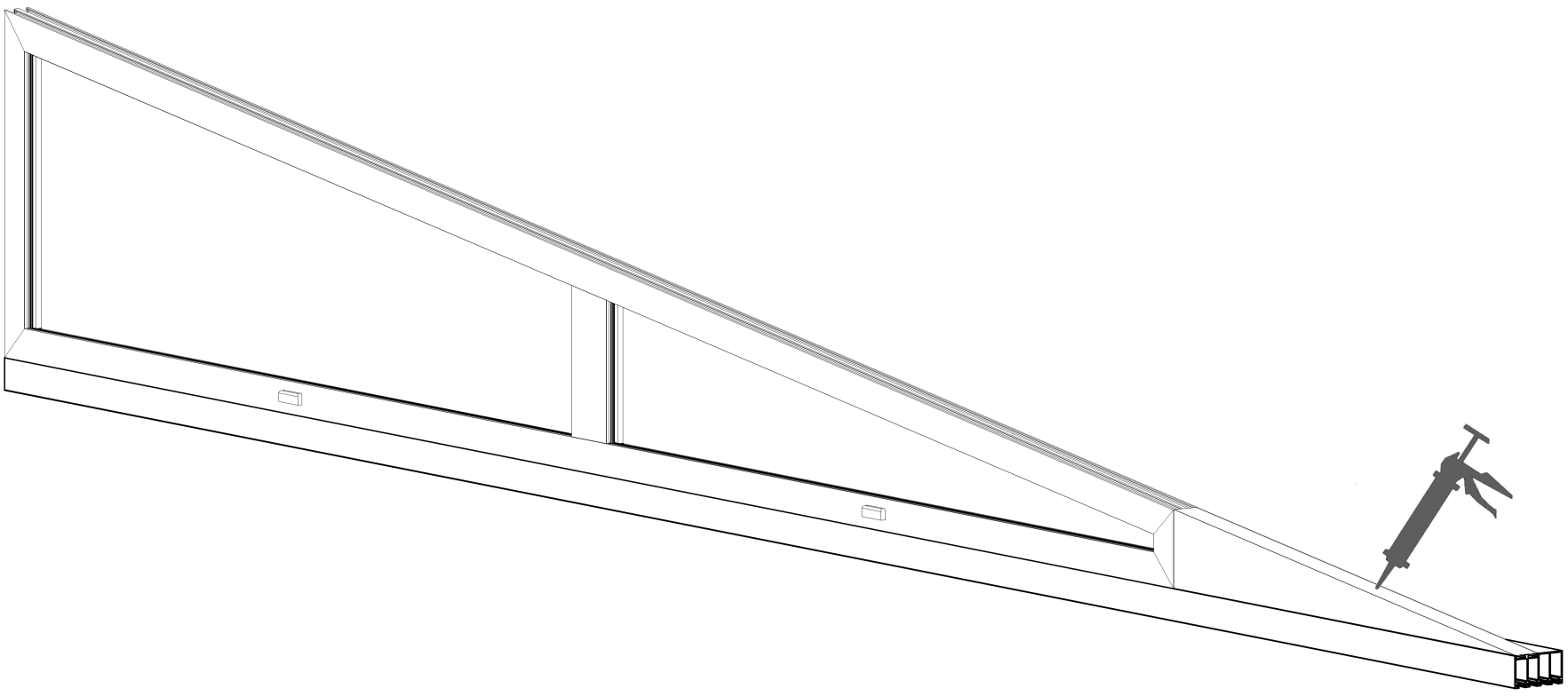

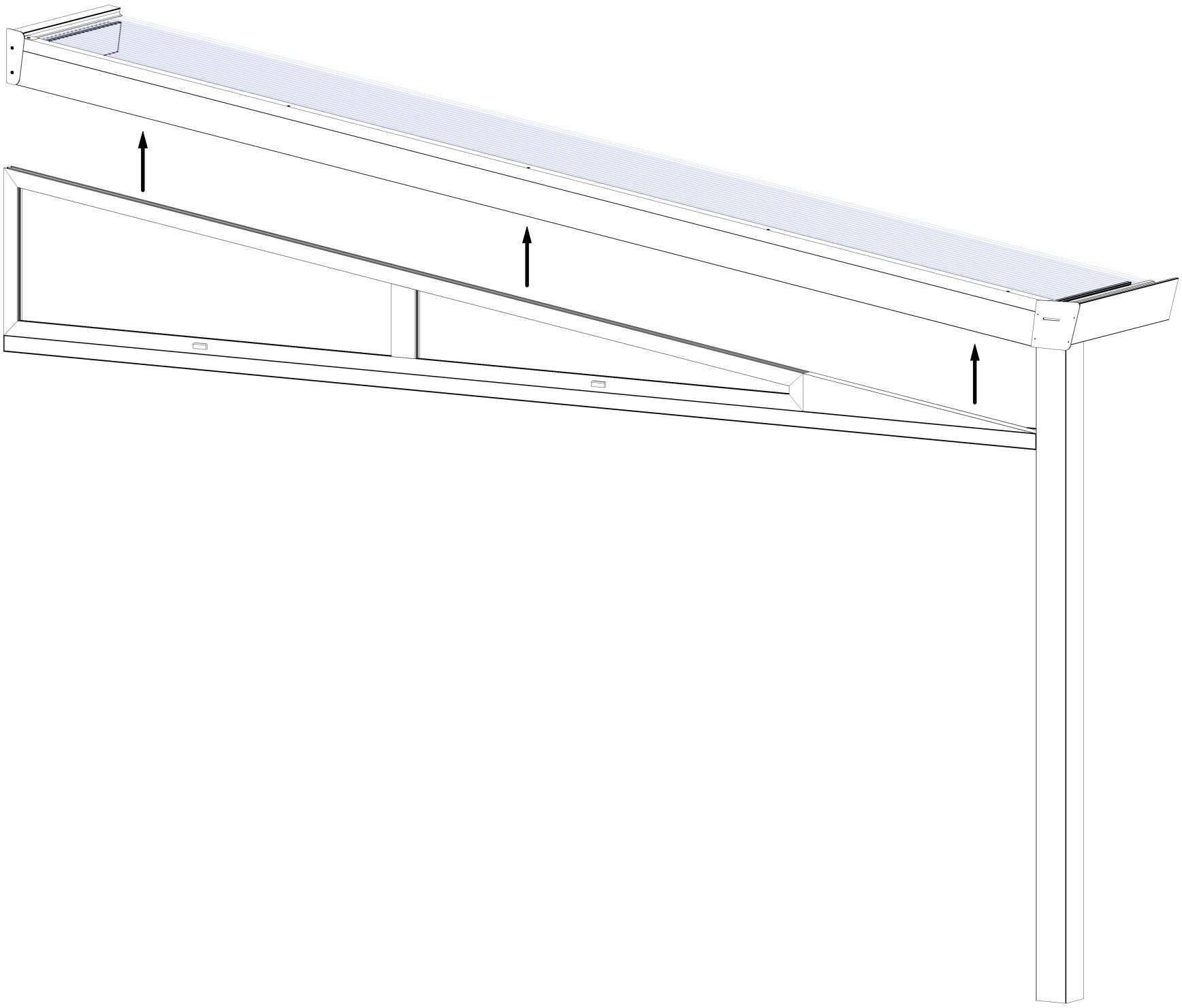

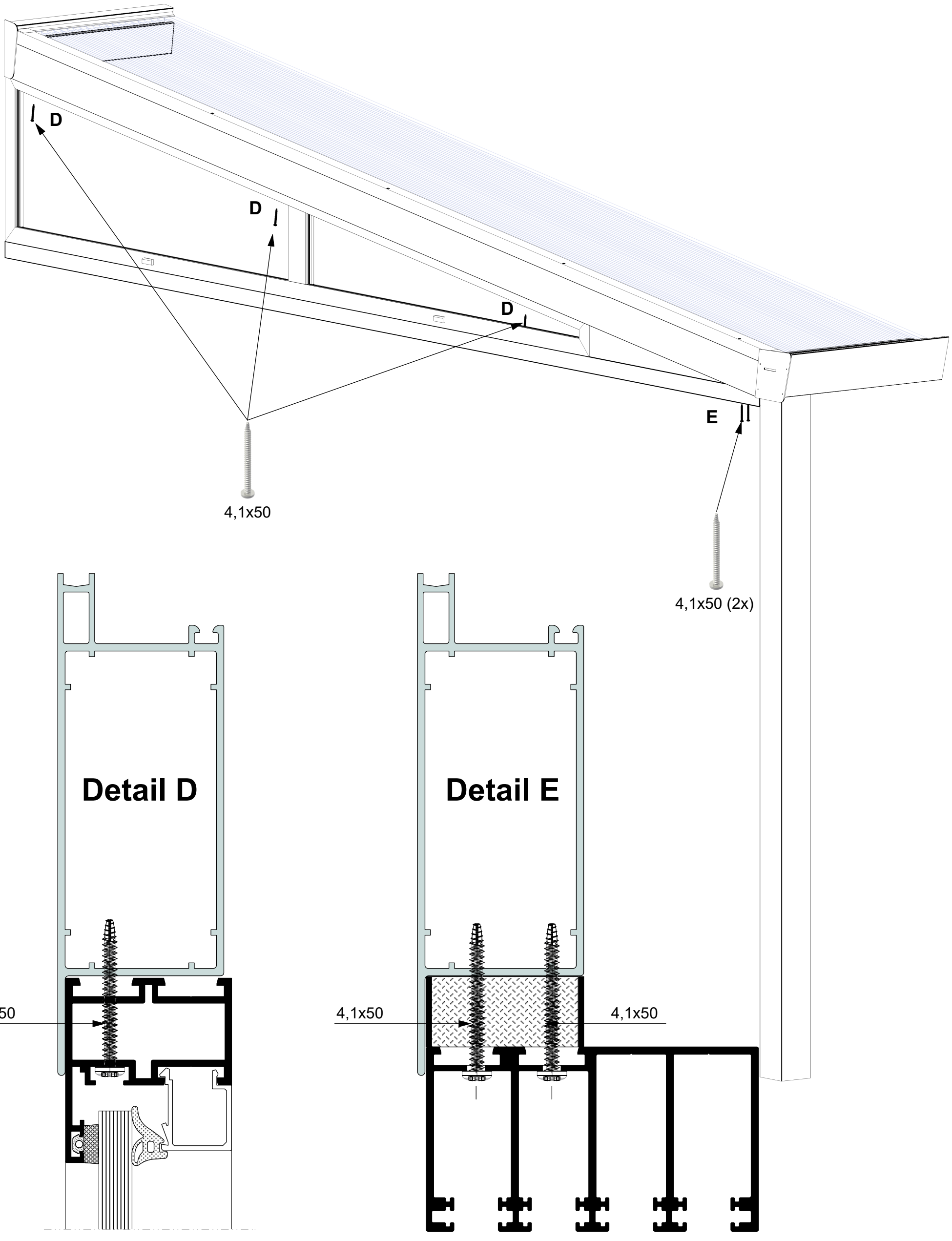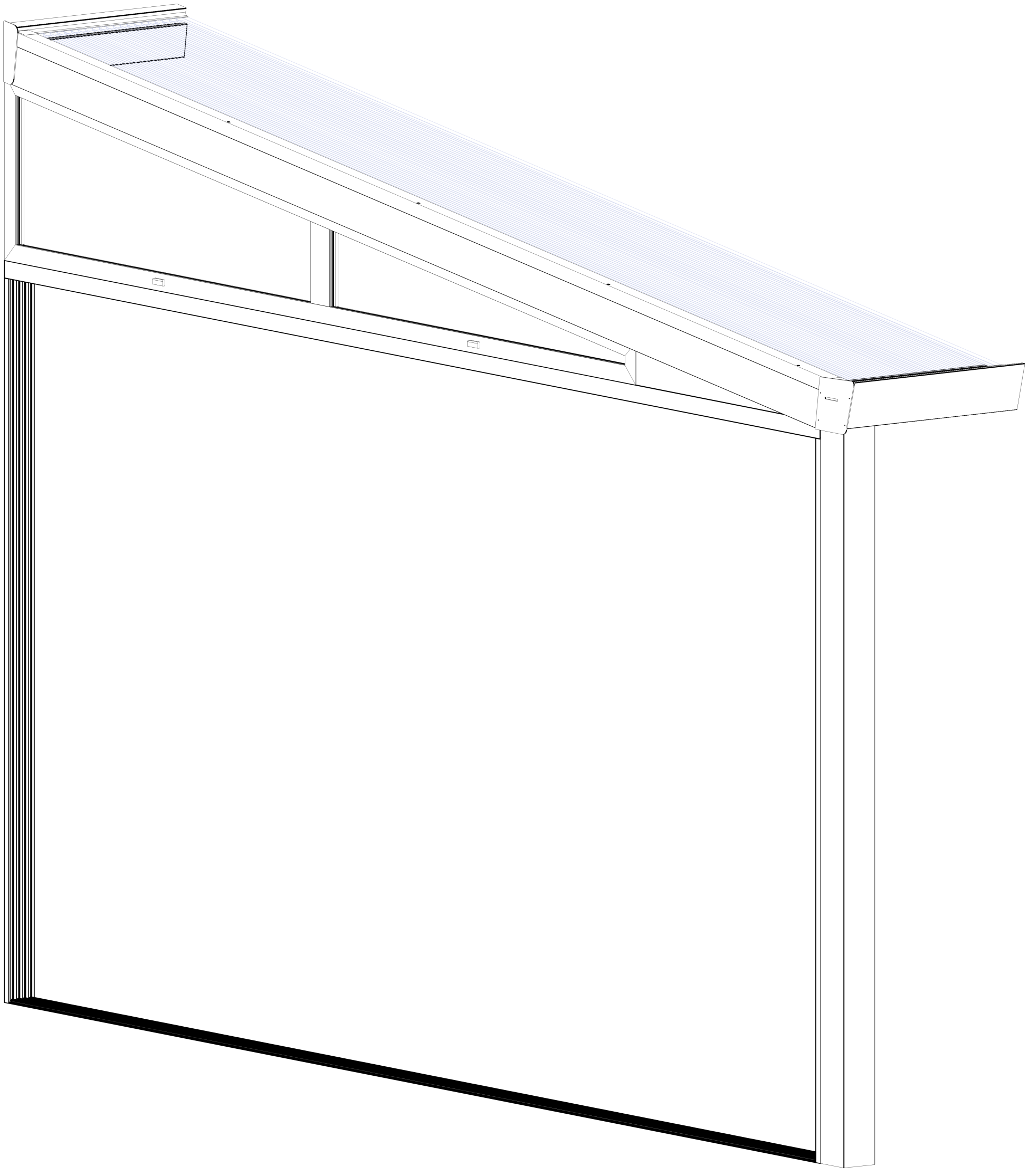
D
D
D
E
4,1x50
4,1x50 (2x)
Detail D
Detail E
4,1x50
4,1x50
4,1x50